CONTACT US!
1-800-249-1612
rtautomation.com

Real Time Automation Gateways

460MM-N2EW

Interconnect Modbus RTU Servers

FEATURES

- Fully configurable Modbus RTU Client
- Connects up to 32 Modbus RTU Servers
- Effortless Browser Based Configuration, no programming software is required
- 5-Year Hardware Warranty

Connect Up to 32 Modbus RTU Servers

The 460MM can handle data exchange with up to 32 Modbus RTU Server devices at one time.
Best of all, the product is made in the USA, always in stock, and comes with a five-year warranty.

How Do I Use the 460MM-N2EW in My Application?

The 460MM also allows for data manipulation when mapping. You can scale or adjust your data before it reaches its destination.
It really is that simple..

Why Use Real Time Automation as a Gateway Supplier?

While there are certainly other companies offering protocol gateways, there is no one who provides the level of support and service that you receive from RTA.

When you call, a live person answers the phone. When you talk with sales, you will get honest answers and recommendations. When you get support, it is from an engineer who had a hand in the product's development, and support doesn't require a ticket or 24-hour wait.

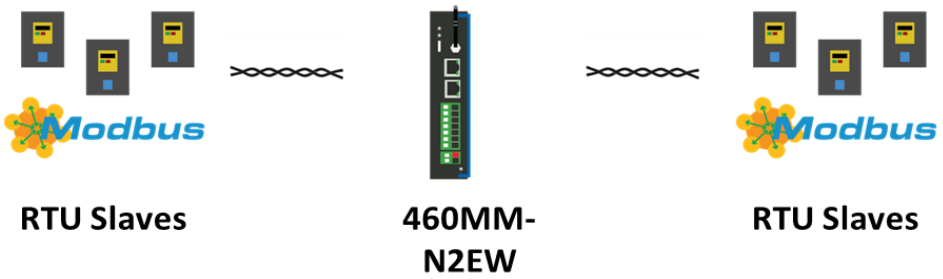

A Solution, A Philosophy, the RTA Way. We understand the long hours spent on a factory floor and the pressure to keep a line running and product flowing. That's how Real Time Automation came to be. You want easy-to-use solutions where the hardest part is to open the box. You need customer support second to none. If you get all that and a fun customer experience all the better. Thirty years later, our mission remains the same: **To move your data where you need it, when you need it, and how you need it.**

Copyright 2024© Real Time Automation®

MODBUS RTU CLIENT FEATURES	
Operation Mode	Modbus RTU Master
Function Codes Supported	1,2,3,4,5,6, 15 & 16
Swapping	Byte and Word Swapping
Maximum Modbus RTU Slave Devices	32
Number Read/Write Scan Lines per RTU Slave Device	200 Total - 100 reads & 100 writes
Scan Line Support	Up to 125 Registers or 512 Coils

ELECTRICAL / ENVIRONMENTAL	
DC Input Voltage	12-24 VDC
Maximum Baud Rate	115K baud
Operating Temperature	-40 C to 85 C
Certification	RoHS-Compliant, UL, CUL, CE Approvals, Class I Div 2
ENCLOSURE / HARDWARE	
Size	5.40" x 3.83" x 1.19"
Weight	7.6 oz
Enclosure Type	Anodized Aluminum
Mounting	Din rail or panel mount
LEDs	Power LED & 2 general purpose LEDs on side
INCLUDED WITH GATEWAY	
3' Power Cable with Flying leads	Manual
Complete, Unlimited Access to our Industry Leading Support Staff.	5 Year Hardware Warranty
IPSetup software – Automatically locates RTA Gateway on the network	Unlimited Firmware Feature Upgrades for Life
CAT5 Cross over cable for direct connection to PC during programming	

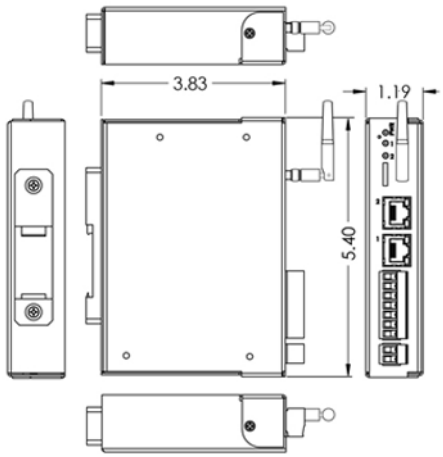

NOT EXACTLY WHAT YOU WERE LOOKING FOR?
Real Time Automation offers a full line of gateway products. Give us a call at 1-800-249-1612. Or, check out a listing at www.rtautomation.com/products. We also offer customizations for unique applications.

CATALOG #	DESCRIPTION
460MM-N2EW	Connects up to 32 Modbus RTU Servers

ALWAYS IN STOCK | READY TO SHIP | MADE IN THE USA | EXPERT SUPPORT | 5-YEAR WARRANTY | EMPLOYEE OWNED