CONTACT US!
1-800-249-1612
rtautomation.com

Real Time Automation Gateways

460MSMRS-N2EW

Modbus RTU to Modbus TCP/IP over Wi-Fi

FEATURES

- Fully configurable Modbus TCP/IP server
- Move up to 100 groups of 512 contiguous coils or 512 contiguous registers to or from your Modbus TCP/IP client
- Fully configurable Modbus RTU Server
- Move up to 100 groups of 512 contiguous coils or 512 contiguous registers to or from your Modbus RTU Client
- Effortless Browser Based Configuration, no programming software is required
- Simple data translation allows you to manipulate data as it passes between protocols
- 5-Year Hardware Warranty

Get Your Modbus TCP/IP Client wirelessly Connected to a Modbus RTU Client

The 460MSMRS moves data wirelessly between a Modbus TCP/IP client device and a Modbus RTU Client device. Data can be freely moved between your Modbus RTU and Modbus TCP/IP controllers over Wi-Fi using Wi-Fi IEEE 802.11 b/g/n at 2.4GHz with AES encryption 128-bit.
Best of all, the product is made in the USA and comes with 5-year warranty.

How Do I Use the 460MSMRS-N2EW in My Application?

To your Modbus TCP/IP client device, the gateway will act as a Modbus TCP/IP server. To your Modbus RTU Client device, the gateway acts as a Modbus RTU Server. In the gateway, you configure the registers and coils that can be accessed on each protocol.
It's really that simple. Need to modify your data as it passes from one protocol to the other? No problem. Each data mapping you apply can be modified with up to three mathematic functions.

Why Use Real Time Automation as a Gateway Supplier?

While there are certainly other companies offering protocol gateways, there is no one who provides the level of support and service that you receive from RTA.

When you call, a live person answers the phone. When you talk with sales, you will get honest answers and recommendations. When you get support, it is from an engineer who had a hand in the product's development, and support doesn't require a ticket or 24-hour wait.

TCP/IP Client | 460MSMRS-N2EW | RTU Clients

A Solution, A Philosophy, the RTA Way. We understand the long hours spent on a factory floor and the pressure to keep a line running and product flowing. That's how Real Time Automation came to be. You want easy-to-use solutions where the hardest part is to open the box. You need customer support second to none. If you get all that and a fun customer experience all the better. Thirty years later, our mission remains the same: **To move your data where you need it, when you need it, and how you need it.**

Copyright 2024© Real Time Automation®

MODBUS TCP SERVER FEATURES	
Operation Mode	Modbus TCP/IP Server
Function Codes Supported	1,2,3,4,5,6, 15 & 16
Swapping	Byte and Word Swapping
Maximum Modbus TCP/IP Client Connections	10
Contiguous Data Areas	200 Total - 100 reads & 100 writes
Data Area Limits	512 Contiguous Coils or 512 Contiguous Registers
MODBUS RTU SERVER FEATURES	
Operation Mode	Modbus RTU Slave
Function Codes Supported	1,2,3,4,5,6, 15 & 16
Swapping	Byte and Word Swapping
Maximum Modbus RTU Master Connections	1
Contiguous Data Areas	200 Total - 100 reads & 100 writes
Data Area Limits	512 Contiguous Coils or 512 Contiguous Registers
INCLUDED WITH GATEWAY	
3' power cable with flying leads	5-year hardware warranty
IPSetup software – automatically locates RTA gateway on the network	Unlimited firmware feature upgrades for life
CAT5 crossover cable for direct connection to PC during programming	Complete, unlimited access to our industry leading support staff
Manual	

ELECTRICAL / ENVIRONMENTAL	
DC Input Voltage	12-24 VDC
Maximum Baud Rate	115K baud
Operating Temperature	-40 C to 85 C
Certification	RoHS-Compliant, UL, CUL, CE Approvals, Class I Div 2
ENCLOSURE / HARDWARE	
Size	5.40" x 3.83" x 1.19"
Weight	7.6 oz
Enclosure Type	Anodized Aluminum
Mounting	Din rail or panel mount
LEDs	Power LED & 2 general purpose LEDs on side
GATEWAY FEATURES & FUNCTIONS	
Alarming	Set <, <=, >, >=, ==, !=, and change-of-state rules on any data moving through the gateway. If alarm rule is triggered an email notification can be sent.
Gateway Security	You can configure up to 9 different users access to diagnostic and configuration screens.
Translation Table	Allows for data manipulation during protocol translation. Scaling and other data format changes can occur in the gateway.
Status and Counters	Protocol specific status, counters, and error messages are accessible within the gateway's diagnostics page. They can also be delivered to a connected device.
Diagnostic Logging Page	Allows users to see and log start up sequences, protocol specific messages & error messages.

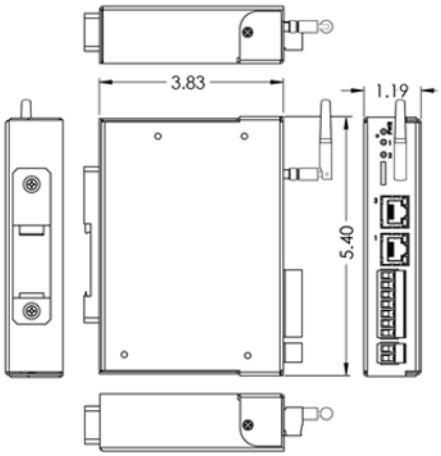

NOT EXACTLY WHAT YOU WERE LOOKING FOR?
Real Time Automation offers a full line of gateway products. Give us a call at 1-800-249-1612. Or, check out a listing at www.rtautomation.com/products. We also offer customizations for unique applications.

CATALOG #	DESCRIPTION
460MSMRS-N2EW	Connects a Modbus TCP client with a Modbus RTU Client over Wi-Fi

ALWAYS IN STOCK | READY TO SHIP | MADE IN THE USA | EXPERT SUPPORT | 5-YEAR WARRANTY | EMPLOYEE OWNED